SKS B2 120 GDD 69/11 - A11 MA PB

SKiiP stack

SEMISTACK for Renewable Energy - Size W2
4-Quadrant 3-phase IGBT converter

Ordering No. 08800589
Description SKS B2 120 GDD 69/11 - A11 MA PB

Features

- Designed in regard to EN50178 and UL508C recommendations
- Designed for a 600 x 600 x 2000 mm cabinet
- Embedded SKiiP® Technology 3
- SKiiP 2403GB172-4DW, Trench 3 1700V IGBT, CAL3 diode
- Integrated current and temperature sensors
- Water cooling

Typical Applications

- Wind generator converter
- Solar inverters

Footnotes

[1] Absolute maximum ratings are values not to be exceeded in any case and do not imply that the stack can operate in all these conditions taken together.
[2] Fan consumption and losses in air included.

REMARKS

This technical information specifies semiconductor devices but promises no characteristics. No warranty or guarantee, expressed or implied is made regarding delivery, performance or suitability.

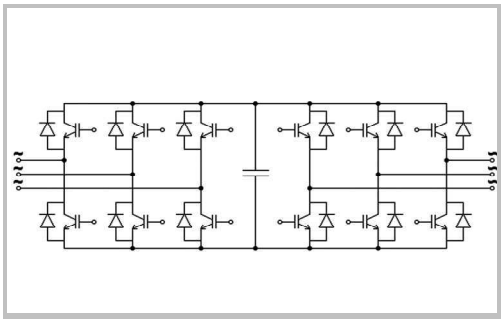

B6CI+B6CI

Absolute maximum ratings [1]			
Symbol	**Conditions**	**Values**	**Unit**
$I_{IN/OUT\ MAX}$	Maximum permanent input/output current	**1 200**	A_{RMS}
$V_{IN/OUT\ MAX}$	Maximum output voltage	**760**	V_{AC}
$V_{BUS\ MAX}$	Maximum DC Bus voltage	**1 200**	V_{DC}
$F_{IN/OUT\ MAX}$	Inverter Output frequency	**100**	Hz
$F_{SW\ IN/OUT\ MAX}$	Maximum switching frequency	**5**	kHz

Electrical characteristics: application example						$T_{AMBIENT}$=40°C unless otherwise specified	
Symbol	**Conditions**		**min**	**typ**	**max**	**Unit**
AC phase Grid						
$I_{OUT\ RATED}$	Rated output current	V_{BUS}=1100 V_{DC}, T_{INLET} = 45°C, 50% glycol Flowrate = 16 L/min T_J < 125°C ambient temperature = 40°C air extraction according to thermal data page 2		**1 200**		A_{RMS}
$I_{OUT\ OVL}$	Overload output current			**1 320**		A_{RMS}
t_{OVL}	Overload duration			**60**		s
T_{OVL}	Time between 2 overloads			**10**		min
V_{OUT}	Output voltage		**620**	**690**	**760**	V_{AC}
P_{OUT}	Rated output power			**1 430**		kW
$F_{SW\ OUT}$	Inverter switching frequency			**2**		kHz
F_{OUT}	Output frequency			**50**		Hz
PF	Power factor			**1**		-
$P_{LOSS\ INV}$ [2]	Losses at rated current			**14090**		W
η [2]	Efficiency at rated current			**99**		%
AC phase Generator						
$I_{IN\ RATED}$	Rated input current	V_{BUS}=1100 V_{DC}, T_{INLET} = 45°C, 50% glycol Flowrate = 16 L/min T_J < 125°C ambient temperature = 40°C air extraction according to thermal data page 2		**1 200**		A_{RMS}
V_{IN}	Input voltage		**620**	**690**	**760**	V_{AC}
P_{IN}	Rated input power			**1430**		kW
$F_{SW\ IN}$	Rectifier switching frequency			**2**		kHz
F_{IN}	Input frequency		**50**		**100**	Hz
PF	Power factor			**-1**		-
$P_{LOSS\ INV}$ [2]	Losses at rated current			**12880**		W
η [2]	Efficiency at rated current			**99**		%

DC Bus					
V_{BUS}	Rated DC voltage applied to the capacitor bank		**1 100**		V_{DC}
$V_{BUS\ MAX}$	Max DC voltage applied to the caps bank (max 30% of LTE)			**1 200**	V_{DC}
$\tau_{d5\%}$	Discharge time of the capacitors (V_{DC} < 60 V)		**5**		min
C_{DC}	Capacitor bank capacity		**14**		mF
LTE	Calculated LTE of the caps with forced air cooling		**100**		kh

Stack Insulation					
Crd	Minimum creepage distance	**11**			mm
Cld	Minimum clearance distance	**9.4**			mm
Visol	Chassis / power stage AC/DC (insulation test voltage DC, 5s)	**-4 200**		**4 200**	V_{DC}
dv/dt	SKiiP driver only, secondary to primary side			**75**	kV/µs

SKiiP stack

SEMISTACK for Renewable Energy - Size W2
4-Quadrant 3-phase IGBT converter

Ordering No. 08800589
Description SKS B2 120 GDD 69/11 - A11 MA PB

Features

- Designed in regard to EN50178 and UL508C recommendations
- Designed for a 600 x 600 x 2000 mm cabinet
- Embedded SKiiP® Technology 3
- SKiiP 2403GB172-4DW, Trench 3 1700V IGBT, CAL3 diode
- Integrated current and temperature sensors
- Water cooling

Typical Applications

- Wind generators (SG and DFIG)
- Solar Inverters

Footnotes

3) the user shall ensure that the ambient air is sufficiently ventilated to avoid hot spots.

REMARKS

This technical information specifies semiconductor devices but promises no characteristics. No warranty or guarantee, expressed or implied is made regarding delivery, performance or suitability.

Environmental conditions					$T_{AMBIENT}$=40°C unless otherwise specified
Characteristics	**Conditions**	**min**	**typ**	**max**	**Unit**
Climatic					
Ambient temperature 3)	Storage: IEC 60721-3-1, class 1K2 Transportation: IEC 60721-3-2, class 2K2	**-25**		**60**	°C
	Operation: IEC 60721-3-3, class 3K3 extended	**-20**		**55**	°C
Humidity	IEC 60721-3-3, class 3K3 no condensation no icing	**5**		**85**	%
Mechanical					
Installation altitude	without derating			**1 000**	m
Max installation altitude	with derating			**4 000**	m
Ingress protection	IEC 60529		**IP00**		-
Vibrations & Shocks	IEC 60721-3-2, Storage & transportation		**2M1**		-
	IEC 60721-3-3, in operation		**3M3**		-
Pollution degree	EN 50178		**2**		-
Mass	per stack		**98**		kg
	4-quadrant converter with DC-connection		**198**		kg
Thermal					
$\Delta V/\Delta t_{WATER}$	Water flow per stack	**8**	**16**	**35**	L/min
	Water flow per 4Q-converter	**16**	**32**	**70**	L/min
ΔP_{WATER}	Pressure drop per stack, with male and female connectors, 50% glycol, 16 L/min		**580**		mbar
	Pressure drop per 4Q-converter, with male and female connectors, 50% glycol, 32 L/min		**580**		mbar
Water pressure	Rated water pressure per inverter		**3**		bar
Coolant type	Recommended coolant		**50% glycol / 50% water**		-
T_{INLET}	Cooling water inlet temperature	**-20**	**45**	**60**	°C
Required cooling airflow 3)	Airflow direction bottom to top on snubbers		**1**		$m.s^{-1}$
V_{SUPPLY}	Fan DC voltage supply	**16**	**24**	**30**	V_{DC}
P_{FAN} per fan	Fan power consumption at typical voltage supply		**90**		W
LTE	Capacitor DC fan lifetime expectancy (L10 method)		**57**		kh

Gate Driver Characteristics					$T_{AMBIENT}$=25°C unless otherwise specified
Symbol	**Conditions**	**min**	**typ**	**max**	**Unit**
Gate Driver / controler data					
V_S	supply voltage non stabilized	**13**	**24**	**30**	V
I_S	V_S = 24 V, F_{SW} in kHz, I_{RMS} in A	**330 + 55×F_{sw} + 0.00035×I_{RMS}^2**			mA
V_{iT+}	input threshold voltage HIGH	**12.3**			V
V_{iT-}	input threshold voltage LOW			**4.6**	V
R_{IN}	Input resistance		**10**		kΩ
C_{IN}	Input capacitance		**1**		nF
Measurement & protection					
I_{analog}	Analogue current signal		**250**		$A.V^{-1}$
$I_{TRIP\ SC}$	Over current trip level ($I_{analogue}$ OUT=10V)	**2450**	**2 500**	**2550**	A_{PEAK}
CMN_TMP	Analogue temperature signal Th < 80°C min	**17 + 10.3×CMN_TMP**			°C
	typ		**19 + 10.5×CMN_TMP**		°C
	max			**20 + 10.5×CMN_TMP**	°C
CMN_TMP	Analogue temperature signal Th > 80°C min	**26 + 8.8×CMN_TMP**			°C
	typ		**28 + 8.8×CMN_TMP**		°C
	max			**30 + 8.9×CMN_TMP**	°C
T_{TRIP}	Over temperature protection	**110**	**115**	**120**	°C

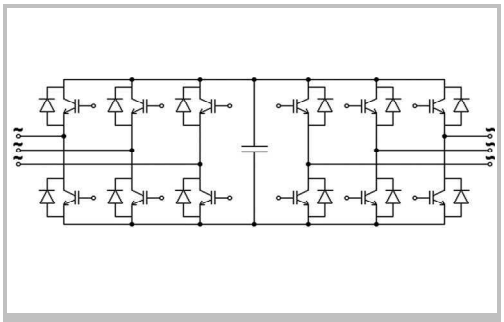

B6CI+B6CI

Electrical connection

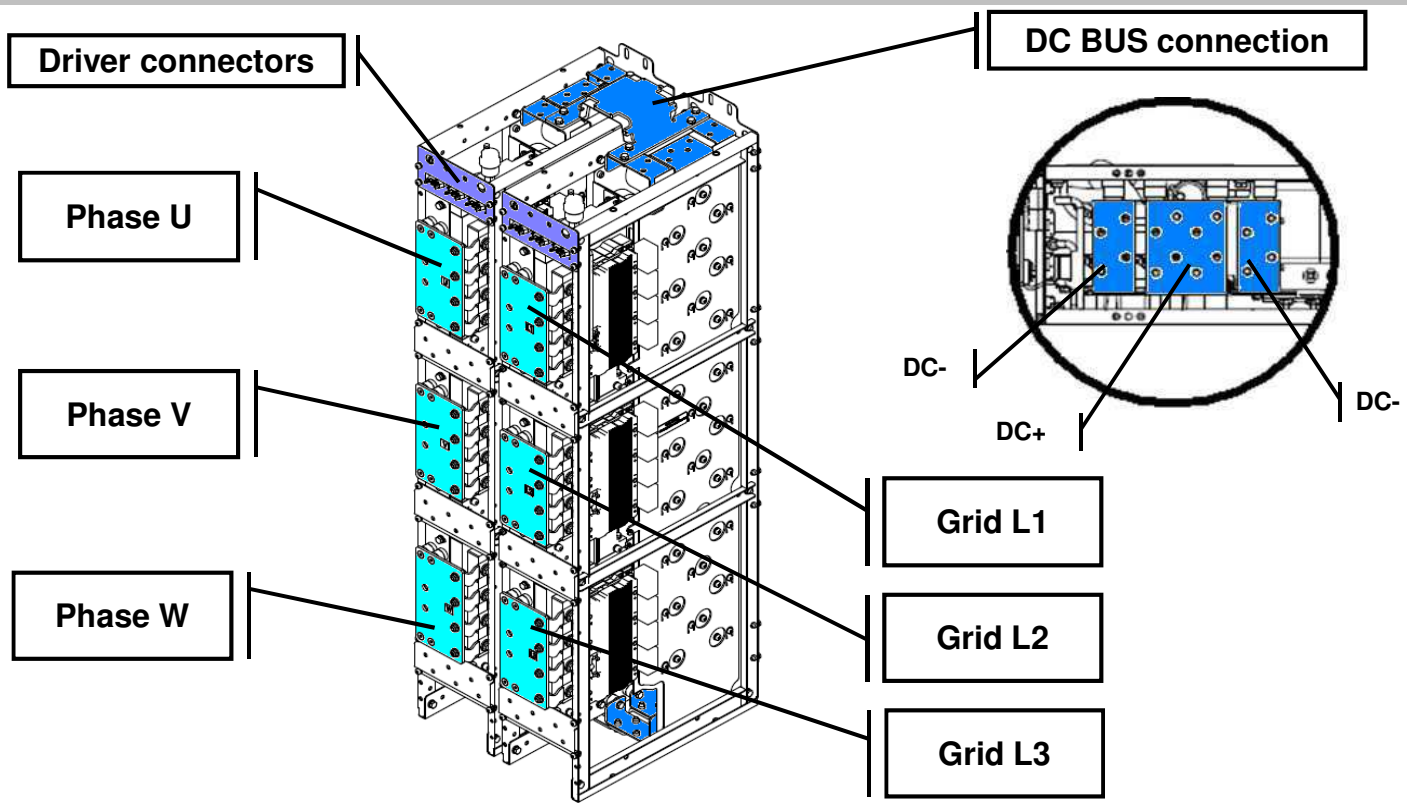

Drive connector assignment

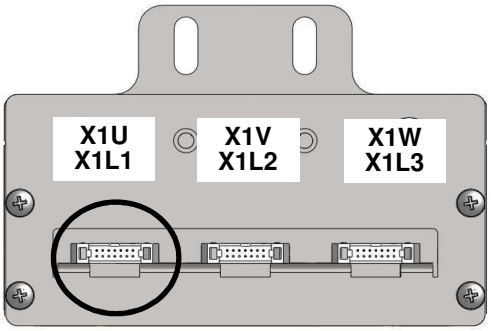

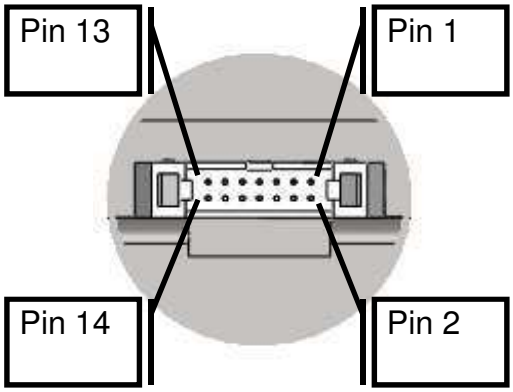

HE10-14 male connector

X1U, X1V, X1W, X1L1, X1L2, X1L3

Pin	Signal	Remark
1	Shield	
2	BOT IN (2)	positive 15V CMOS logic; 10 kΩ impedance, don´t connect when using fiber optic
3	ERROR OUT (1)	LOW = NO ERROR; open Collector Output; max. 30 V / 15 mA don´t connect when using fiber optic, propagation delay 1 µs min. pulsewidth error-memory-reset 9 µs
4	TOP IN (2)	positive 15V CMOS logic; 10 kΩ impedance don´t connect when using fiber optic
5	Overtemp. OUT (1)	LOW = NO ERROR = ϑDCB < 115 + 5°C open collector Output; max. 30 V / 15 mA „low“ output voltage < 0,6 V „high“ output voltage max. 30 V
6	+ 24 VDC IN	24 VDC (SKiiP 2: 20 - 30 V, SKiiP 3: 13 - 30 V)
7	+ 24 VDC IN	don´t supply with 24V, when using +15 VDCIN supply voltage monitoring threshold 19,5 V
8	+15 VDC OUT	max. 50 mA auxiliary power supply when
9	+15 VDC OUT	SKiiP system is supplied via pin 6/7
10	GND	GND for power supply and
11	GND	GND for digital signals
12	Temp. analog OUT	max output current 5mA
13	GND aux	reference for analog output signals
14	I analog OUT	SKiiP 3 with Al2O3 ceramic substrate current actual value 8,0 V ⇔ 100 % IC @ 25 °C overcurrent trip level 10 V ⇔ 125 % IC @ 25 °C current value > 0 ⇔ SKiiP system is source current value < 0 ⇔ SKiiP system is sink SKiiP 3 with AlN ceramic substrate: refer to corresponding datasheet

1) Open collector output, external pull up resistor necessary
2) „high“ (max) 12,3 V, „low“ (min) 4,6 V; SKiiP 3: 1 nF capacitance added signal to GND

DC fan connection

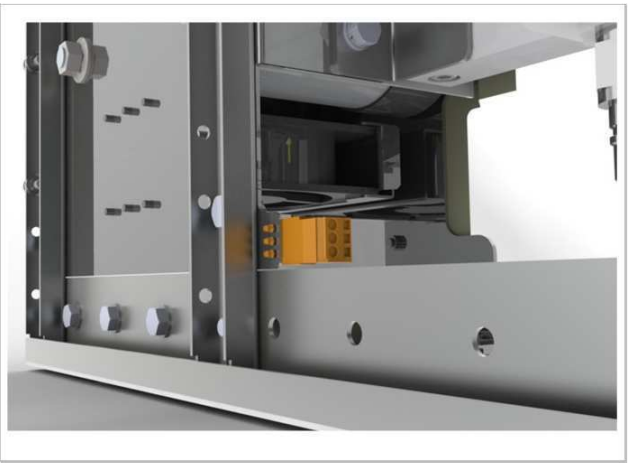

Fan connection detail

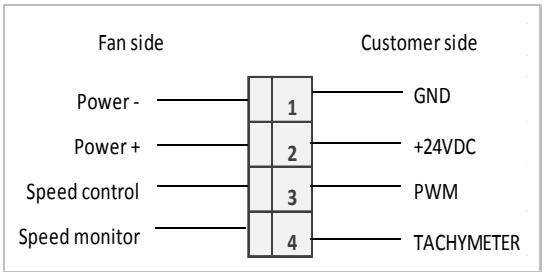

Fan connection detail

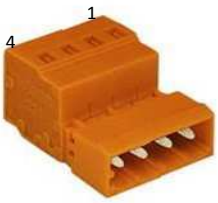

Pin	Designation
1	GND
2	+24VDC
3	PWM
4	MONITOR

DC fan speed control

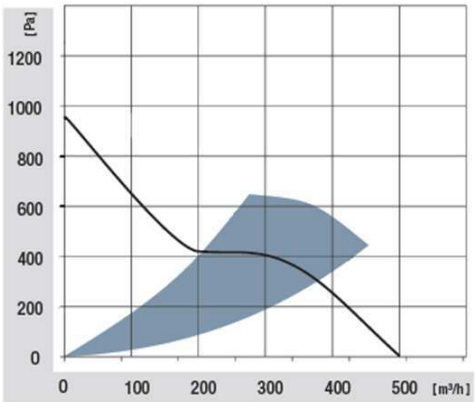

Characteristic pressure drop vs air flow

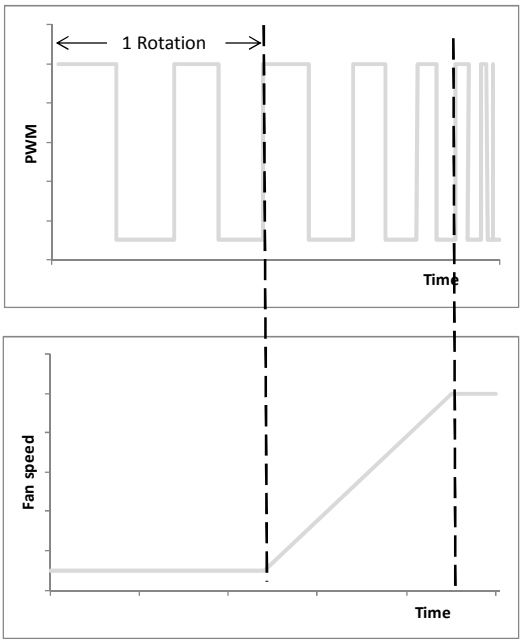

Speed control behavior

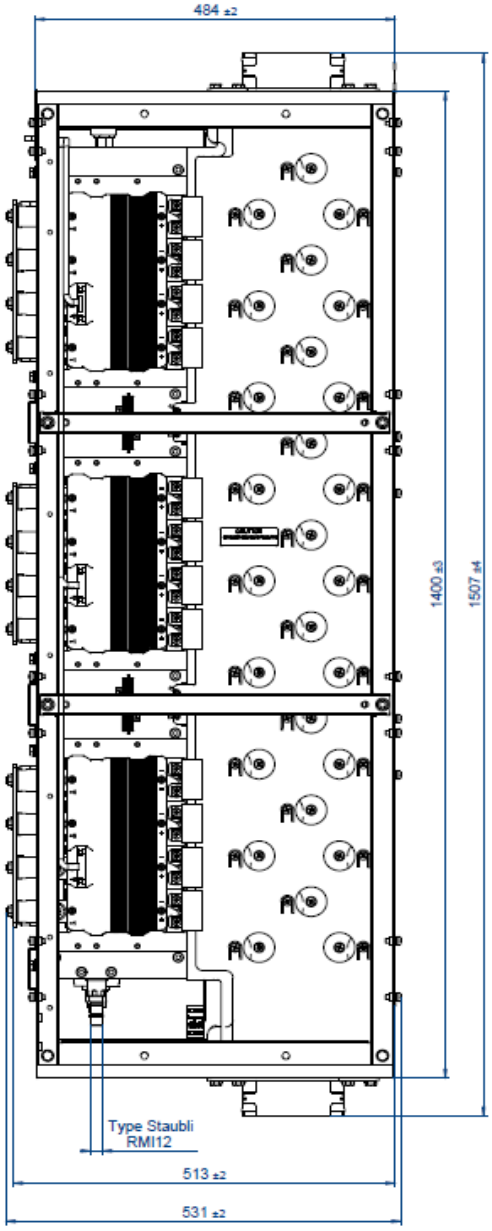

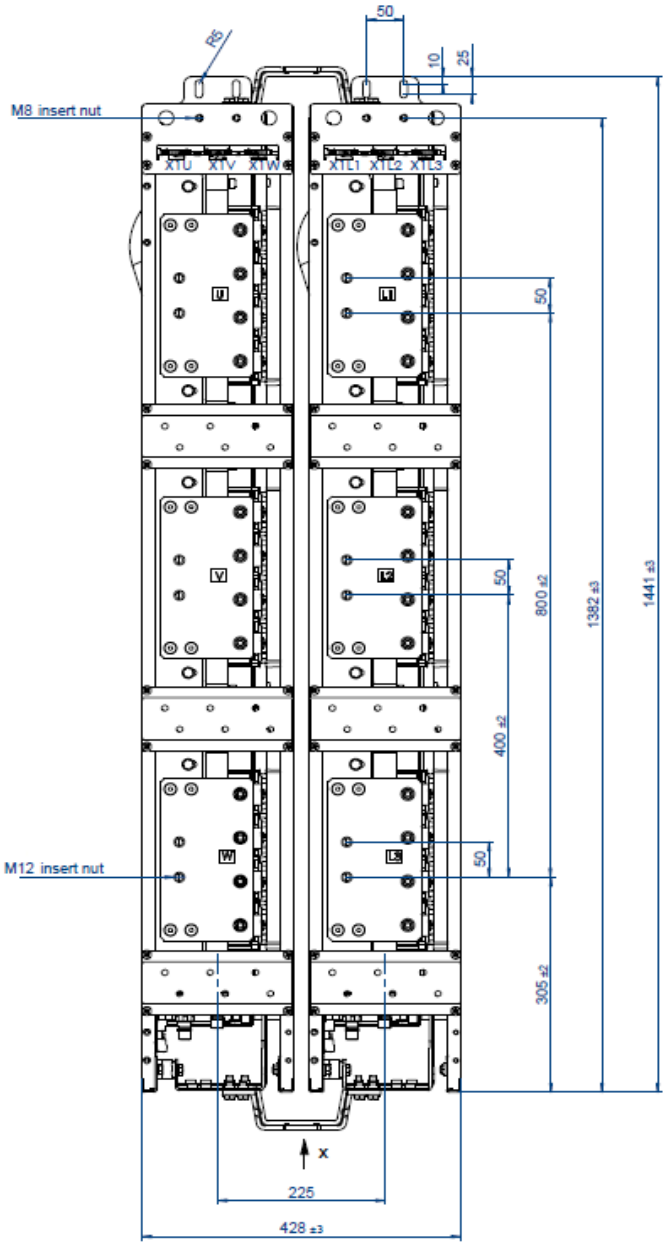

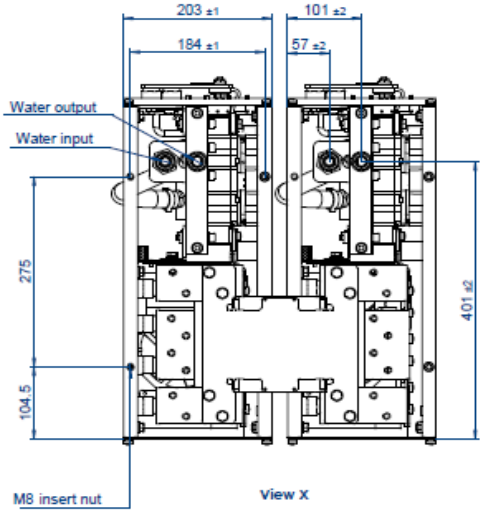

Dimensions

This technical information specifies semiconductor devices but promises no characteristics. No warranty or guarantee expressed or implied is made regarding delivery, performance or suitability.

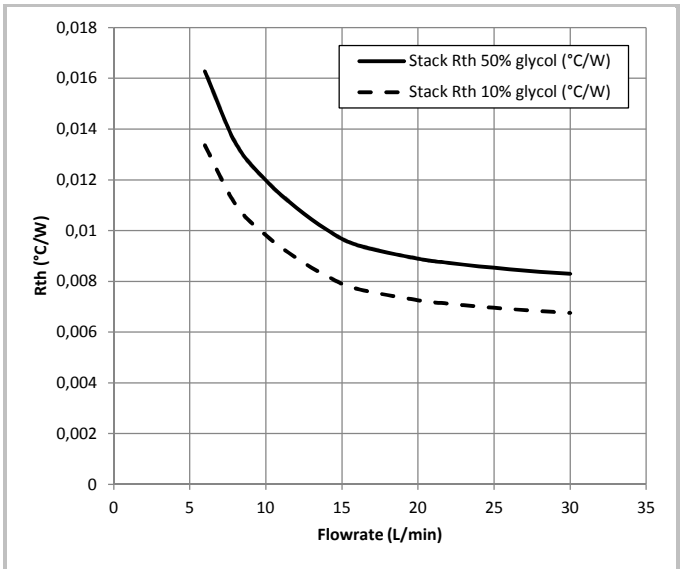

$Rth_{SINK-WATER}$(stack) vs. Liquid Flow

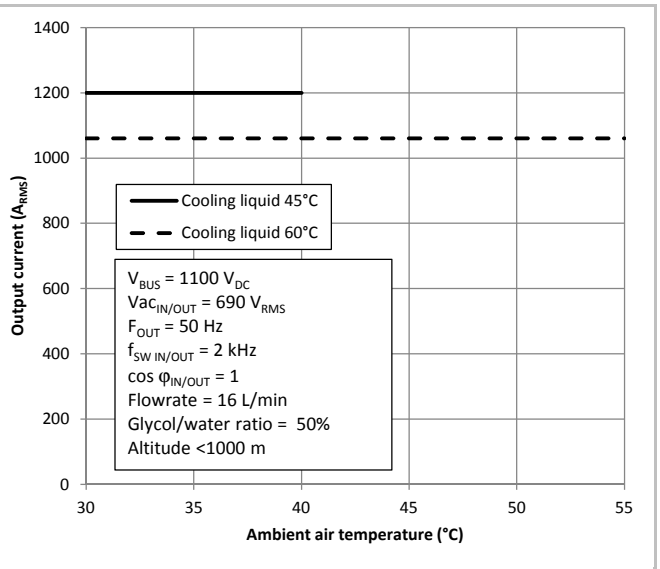

Permanent Output Current vs. Ambient Temperature

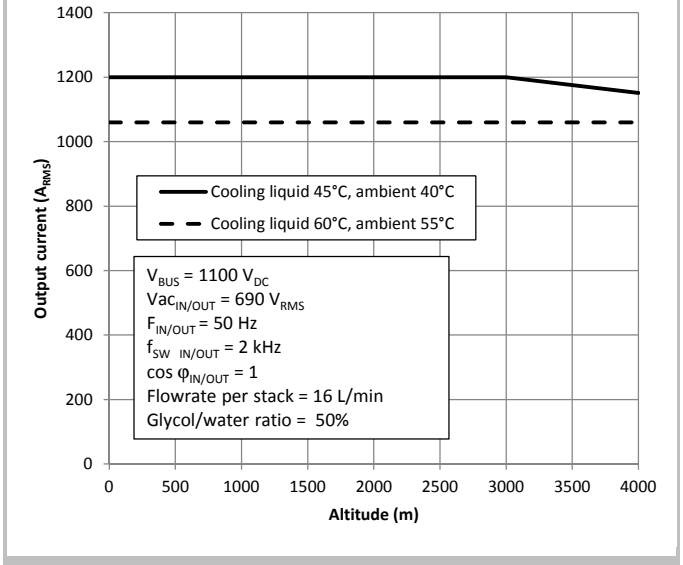

Permanent Output Current vs. Altitude

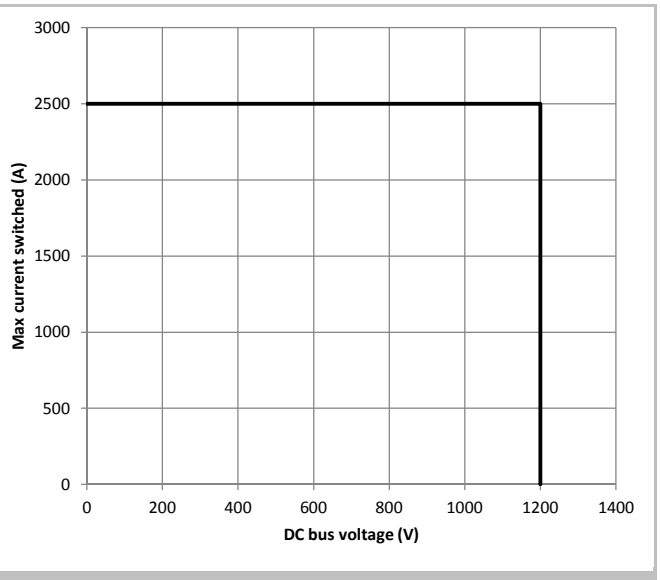

Safe Operating Area

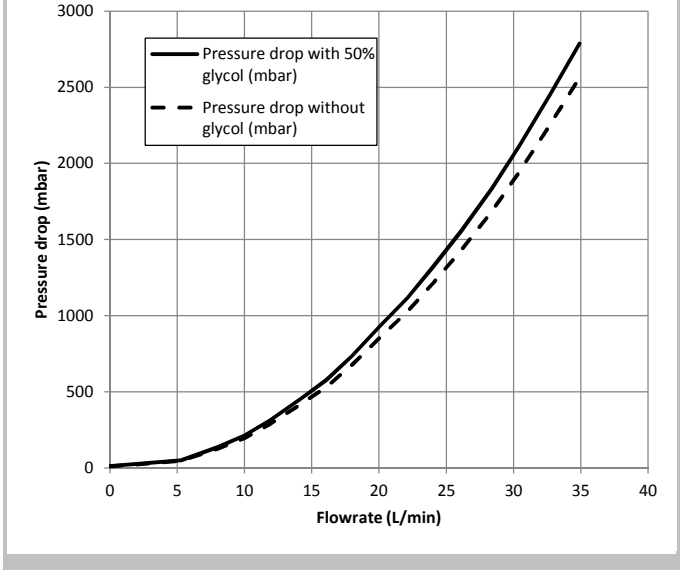

Pressure Drop vs. Flowrate (per stack)

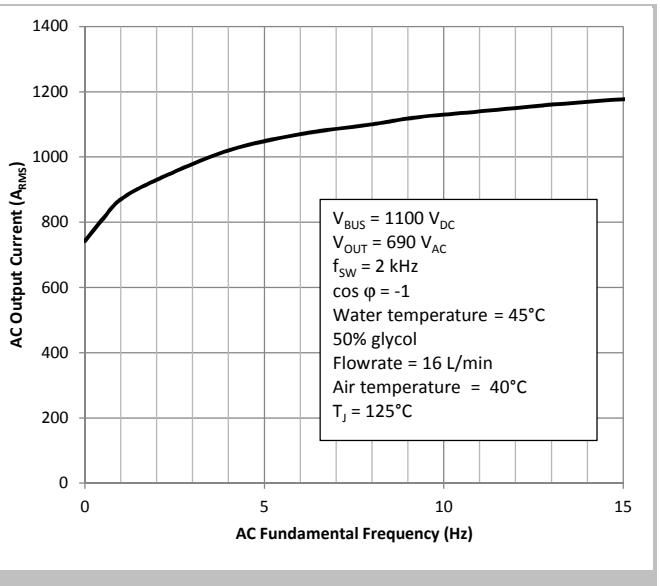

Input Current vs. Input frequency (generator side)