SKS B2 140 GDD 69/12 U – A11 MA PB

SKiiP stack

SEMISTACK® Renewable Energy - Size W2
4-Quadrant 3-phase IGBT converter

Ordering No. 08800588
Description SKS B2 140 GDD 69/12 U – A11 MA PB

Features

- Designed in regard to EN50178 recommendations and UL508C recommendations
- Designed for a 600 x 600 x 2000 mm cabinet
- Embedded SKiiP® Technology 4
- SKiiP 2414GB17E4-4DUW, Trench 4 1700V IGBT, CAL4 diode
- Integrated current, temperature & voltage sensors
- Water cooling

Typical Applications

- Wind generators (SG and DFIG)
- Solar inverters

Footnotes

[1] Absolute maximum ratings are values not to be exceeded in any case and do not imply that the stack can operate in all these conditions taken together.

[2] fan consumption and losses in air included

REMARKS

This technical information specifies semiconductor devices but promises no characteristics. No warranty or guarantee, expressed or implied is made regarding delivery, performance or suitability.

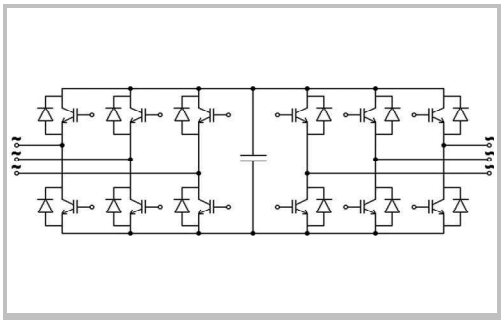

B6CI + B6CI

Absolute maximum ratings [1]			
Symbol	**Conditions**	**Values**	**Unit**
$I_{IN/OUT\ MAX}$	Maximum permanent input/output current	**1 400**	A_{RMS}
$V_{IN/OUT\ MAX}$	Maximum permanent input/output voltage	**760**	V_{AC}
$V_{BUS\ MAX}$	Maximum DC Bus voltage	**1 300**	V_{DC}
$F_{IN/OUT\ MAX}$	Maximum rectifier/inverter output frequency	**100**	Hz
$F_{SW\ IN/OUT\ MAX}$	Maximum switching frequency	**5**	kHz

Electrical characteristics						$T_{AMBIENT}$=40°C unless otherwise specified	
Symbol	**Conditions**		**min**	**typ**	**max**	**Unit**
AC phase Grid						
$I_{OUT\ RATED}$	Rated output current	V_{BUS}=1250 V_{DC}, T_{INLET} = 45°C, 50% glycol Flowrate = 16 L/min T_J <150°C Ambient temperature = 40°C air extraction according to thermal data page 2		**1 400**		A_{RMS}
$I_{OUT\ OVL}$	Overload output current			**1 540**		A_{RMS}
t_{OVL}	Overload duration			**60**		s
T_{OVL}	Time between 2 overloads			**10**		min
V_{OUT}	Output voltage		**620**	**690**	**760**	V_{AC}
P_{OUT}	Rated output power			**1 670**		kW
$F_{SW\ OUT}$	Inverter switching frequency			**2**		kHz
F_{OUT}	Output frequency			**50**		Hz
PF	Power factor			**1**		-
$P_{LOSS\ INV}$ [2]	Losses at rated current			**18 200**		W
η [2]	Efficiency at rated current			**99**		%
AC phase Generator						
$I_{IN\ RATED}$	Rated input current	V_{BUS} = 1250 V_{DC} T_{INLET} = 45°C, 50% glycol Flowrate = 16 L/min T_J<150°C ambient temperature = 40°C air extraction according to thermal data page 2		**1 400**		A_{RMS}
$I_{IN\ OVL}$	Overload input current			**1 540**		A_{RMS}
t_{OVL}	Overload duration			**60**		s
T_{OVL}	Time between 2 overloads			**10**		min
V_{IN}	Input voltage		**620**	**690**	**760**	V_{AC}
P_{IN}	Rated input power			**1 670**		kW
$F_{SW\ IN}$	Rectifier switching frequency			**2**		kHz
F_{IN}	Input frequency			**50**		Hz
PF	Power factor			**-1**		-
$P_{LOSS\ REC}$ [2]	Losses at rated current			**17 600**		W
η [2]	Efficiency at rated current			**99**		%

DC Bus					
V_{BUS}	Rated DC voltage applied to the capacitor bank		**1 250**		V_{DC}
$V_{BUS\ MAX}$	Max DC voltage applied to the caps bank (max 30% of LTE)			**1 300**	V_{DC}
$\tau_{d5\%}$	Discharge time of the capacitors (V_{DC} < 60 V)		**6**		min
CDC	Capacitor bank capacitance		**16,2**		mF
LTE	Calculated LTE of the caps with forced air cooling			**100**	kh

Stack Insulation					
Crd	Minimum creepage distance	**11**			mm
Cld	Minimum clearance distance	**9.4**			mm
Visol	Chassis / Power stage AC/DC (insulation test voltage DC, 5s)	**-4 200**		**4 200**	V_{DC}
dv/dt	SKiiP driver only, secondary to primary side			**75**	kV/µs

SKiiP stack

SEMISTACK® Renewable Energy - Size W2
4-Quadrant 3-phase IGBT converter

Ordering No. 08800588
Description SKS B2 140 GDD 69/12 U – A11 MA PB

Features

- Designed in regard to EN50178 recommendations and UL508C recommendations
- Designed for a 600 x 600 x 2000 mm cabinet
- Embedded SKiiP® Technology 4
- SKiiP 2414GB17E4-4DUW, Trench 4 1700V IGBT, CAL4 diode
- Integrated current, temperature & voltage sensors
- Water cooling

Typical Applications

- Wind generators (SG and DFIG)
- Solar inverters

Footnotes

3) the user shall ensure that the ambient air is sufficiently ventilated to avoid hot spots.

REMARKS

This technical information specifies semiconductor devices but promises no characteristics. No warranty or guarantee, expressed or implied is made regarding delivery, performance or suitability.

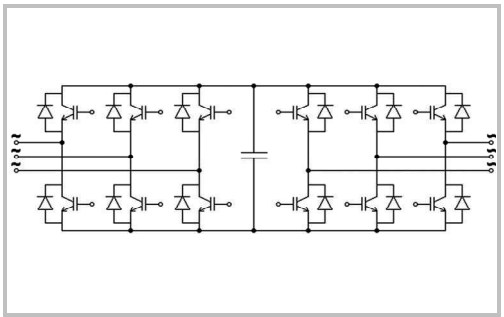

B6CI + B6CI

Environmental conditions		$T_{AMBIENT}$=40°C unless otherwise specified			
Characteristics	**Conditions**	**min**	**typ**	**max**	**Unit**
Climatic					
Ambient temperature 1)	IEC 60721-3, class 1K2&2K2 Storage & transportation	**-25**		**60**	°C
	IEC 60721-3-3, class 3K3 extended In operation	**-20**		**55**	°C
Humidity	IEC 60721-3-3, class 3K3 no condensation no icing	**5**		**85**	%
Mechanical					
Installation altitude	without derating			**1 000**	m
Max installation altitude	with derating			**4000**	m
Protection degree	IEC 60529		**IP00**		-
Vibrations & Shocks	IEC 60721-3-2, Storage & transportation		**2M1**		-
	IEC 60721-3-3, In operation		**3M3**		-
Pollution degree	EN 50178		**2**		-
Mass	SEMISTACK RE		**106**		kg
	4-Quadrant converter		**214**		kg
Thermal data					
$\Delta V/\Delta t_{WATER}$	Water flow per SEMISTACK RE	**8**	**16**	**35**	L/min
	Water flow per 4Q-converter	**16**	**32**	**70**	L/min
ΔP_{WATER}	Pressure drop per stack, with male and female connectors, 50% glycol, 16 L/min		**340**		mbar
	Pressure drop per 4Q-converter, with male and female connectors, 50% glycol, 32 L/min		**340**		mbar
Water pressure	Rated water pressure per SEMISTACK RE		**3**		bar
Coolant type	Recommended coolant		**50% glycol / 50% water**		-
T_{INLET}	Cooling water inlet temperature	**-20**	**45**	**60**	°C
Required cooling airflow	Snubbers, airflow direction bottom-top 3)		**1**		ms^{-1}
V_{SUPPLY}	Capacitor DC fan operating voltage	**16**	**24**	**30**	V_{DC}
P_{FAN} per fan	Fan power consumption at typical voltage supply		**90**		W
LTE	Capacitor DC fan life time expectancy (L10 method)		**57**		kh

Gate Driver Characteristics		$T_{AMBIENT}$=25°C unless otherwise specified			
Symbol	**Conditions**	**min**	**typ**	**max**	**Unit**
Gate Driver / Controler Data					
V_S	supply voltage non stabilized	**19.2**	**24**	**28.8**	V_{DC}
IS2	per SKiiP®, V_{S2} = 24 V, F_{SW} in kHz, I_{RMS} in A	**360 + 47×F_{sw} + 0.258×I_{RMS}**			mA
ViT+	input threshold voltage HIGH	**0.7 V_S**			V_{DC}
ViT-	input threshold voltage LOW			**0.3 V_S**	V_{DC}
Rin	Input resistance		**13**		kΩ
Cin	Input capacitance		**1**		nF
Measurement & protection					
HB_I	Analogue current signal HB_I	**353**	**360**	**367**	$A.V^{-1}$
$I_{TRIP\ SC}$	over current trip level (I_{analog} OUT=10V)	**3 525**	**3 600**	**3 675**	A_{PEAK}
CMN_TEMP	Analogue temperature signal Min.	**30 + 11.3xCMN_TEMP**			°C
	Typ		**30 + 12xCMN_TEMP**		°C
	Max			**30 + 12.7xCMN_TEMP**	°C
T_{TRIP}	Over temperature protection	**128**	**135**	**142**	°C
CMN_DCL	DC-link voltage analog signal	**130**	**134**	**138**	$V.V^{-1}$
V_{DCtrip}	Overvoltage trip level	**1300**	**1340**	**1380**	V

Electrical connection

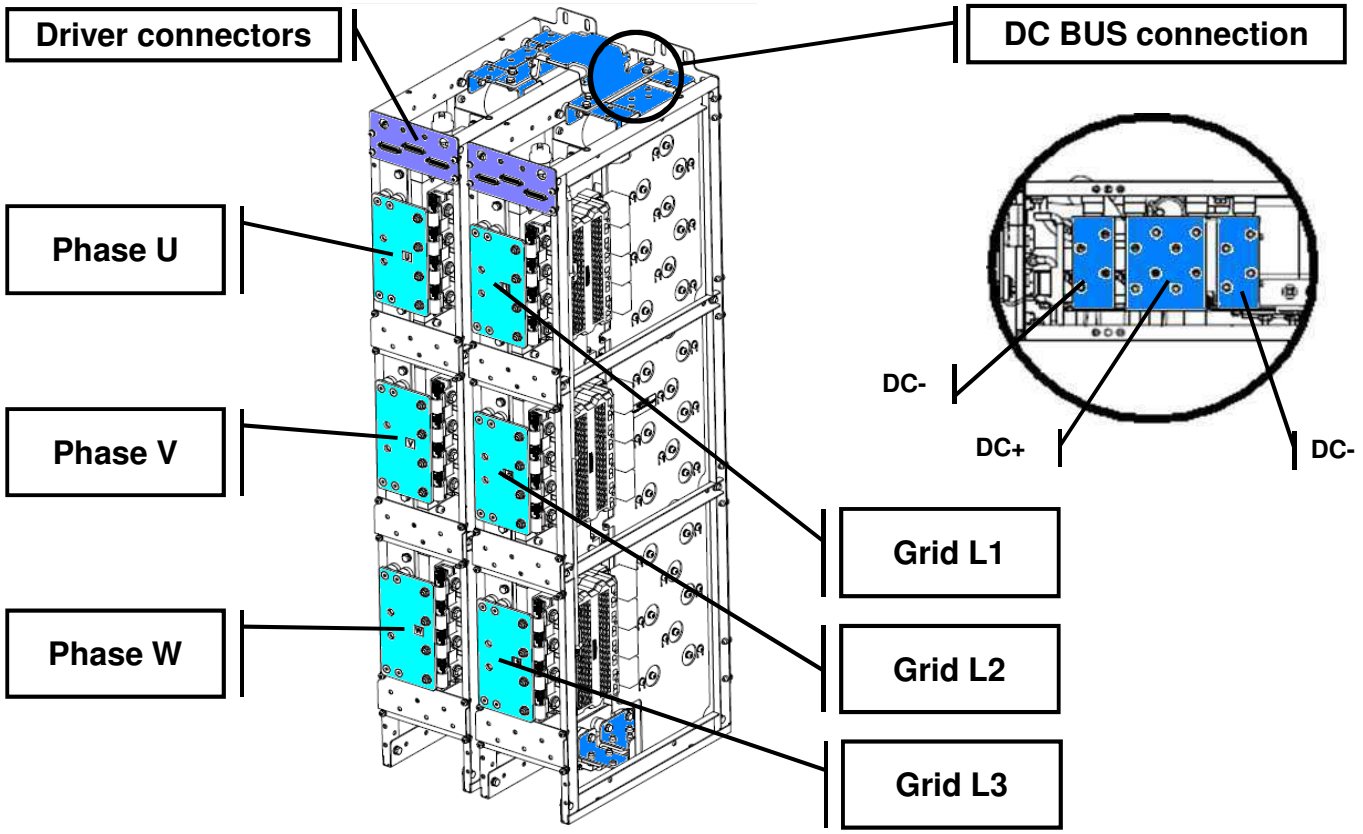

Phase Driver connector assignment

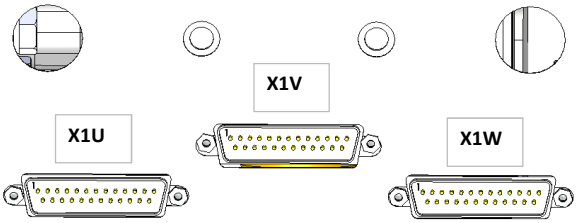

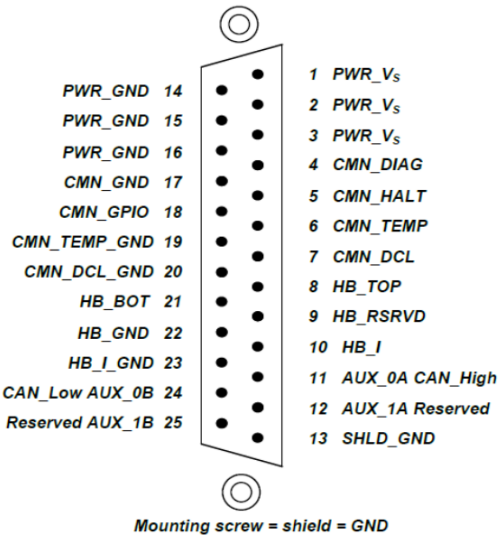

Sub-D 25 pin male connector

X1U, X1V, X1W, X1L1, X1L2, X1L3

Pin	Signal	Remark
1	PWR_V_S	Power Supply
2		
3		
14	PWR_GND	Ground for PWR_V_S
15		
16		
4	CMN_DIAG	Reserved
17	CMN_GND	Ground for CMN_DIAG, CMN_HALT, CMN_GPIO
5	CMN_HALT	Digital input/output, bidirectional status signal
18	CMN_GPIO	Digital input/output, general purpose IO
6	CMN_TEMP	Temperature signal out
19	CMN_TEMP_GND	Ground for CMN_TEMP
7	CMN_DCL	DC-link voltage out
20	CMN_DCL_GND	Ground for CMN_DCL
8	HB_TOP	Switching signal input for HB high side IGBT
21	HB_BOT	Switching signal input for HB low side IGBT
9	HB_RSRVD	Reserved
22	HB_GND	Ground for HB_TOP, HB_BOT, HB_RSRVD
10	HB_I	Current sensor out
23	HB_I_GND	Ground for HB_I
11	AUX_0A	CAN interface INPUT/OUTPUT HIGH
24	AUX_0B	CAN interface INPUT/OUTPUT LOW
12	AUX_1A	Reserved
25	AUX_1B	Reserved
13	SHLD_GND	GND

DC fan connection

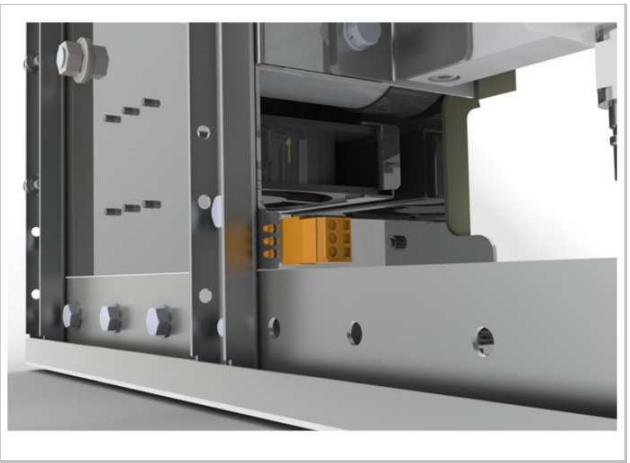

Fan connection detail

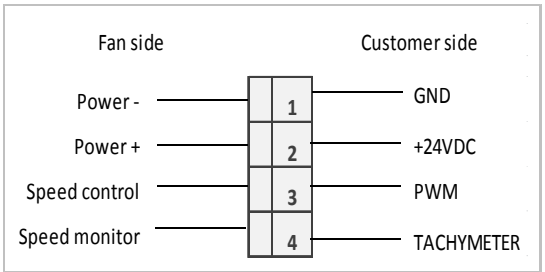

Fan connection detail

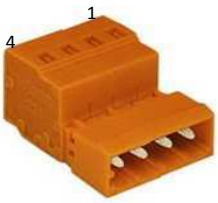

Pin	Designation
1	GND
2	+24VDC
3	PWM
4	MONITOR

DC fan speed control

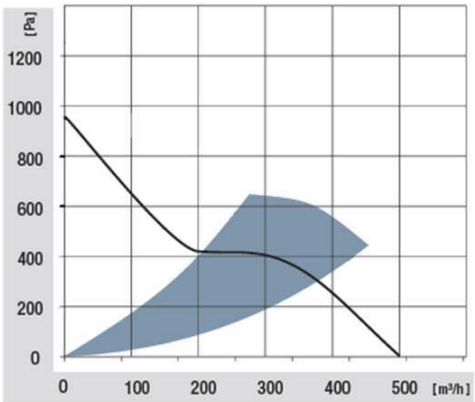

Characteristic pressure drop vs air flow

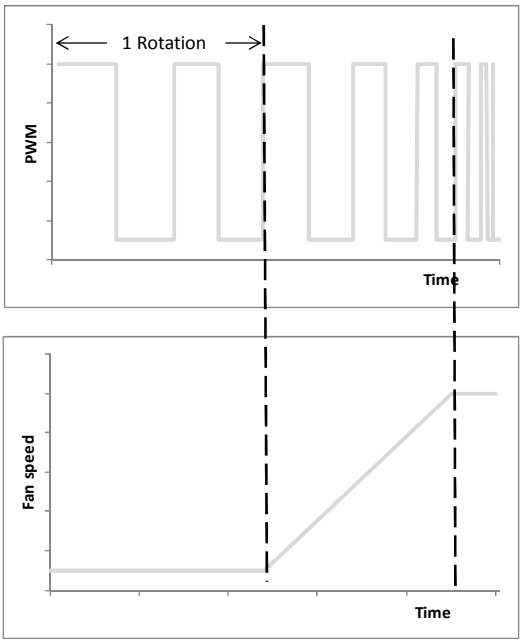

Speed control behavior

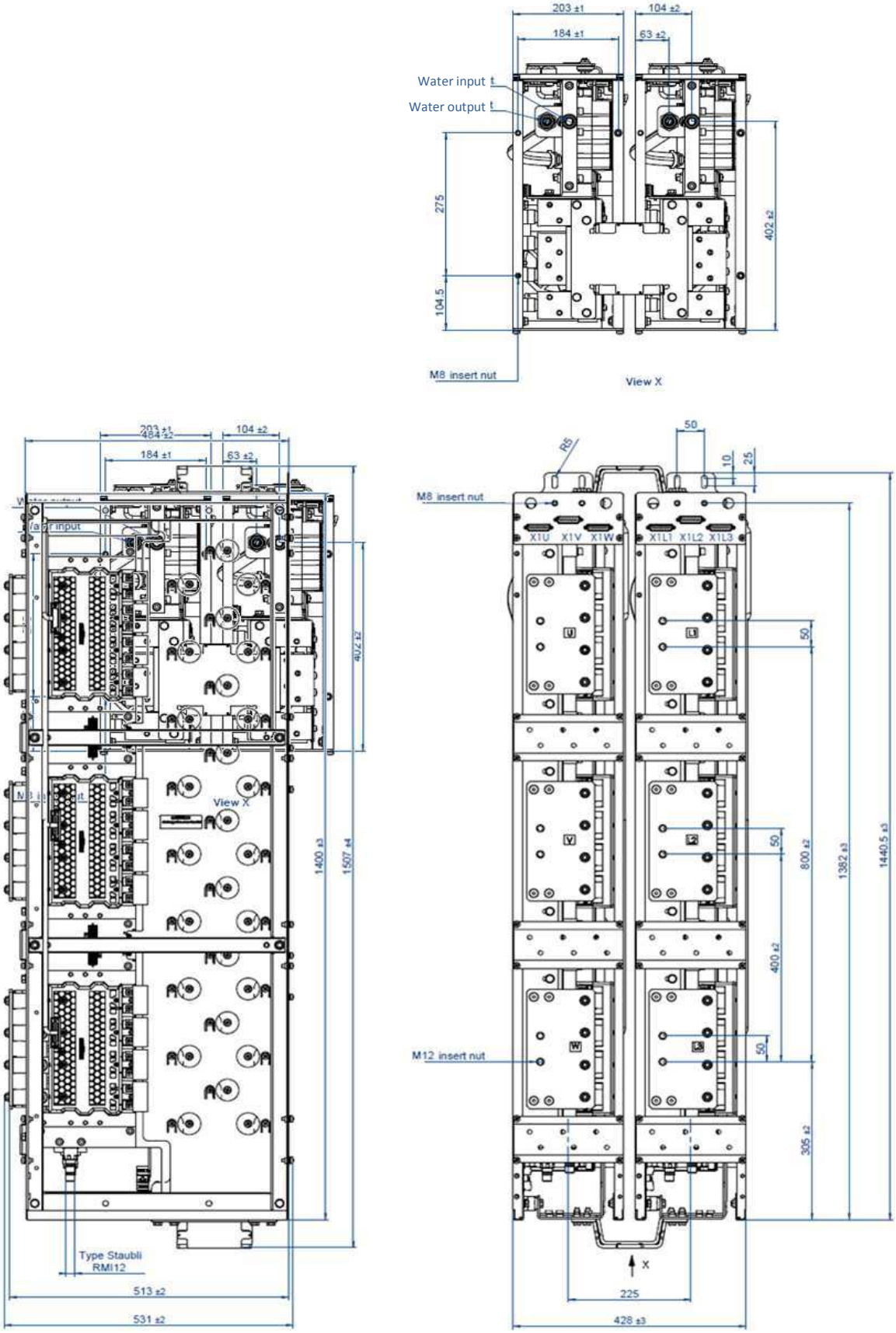

Dimensions

This technical information specifies semiconductor devices but promises no characteristics. No warranty or guarantee expressed or implied is made regarding delivery, performance or suitability.

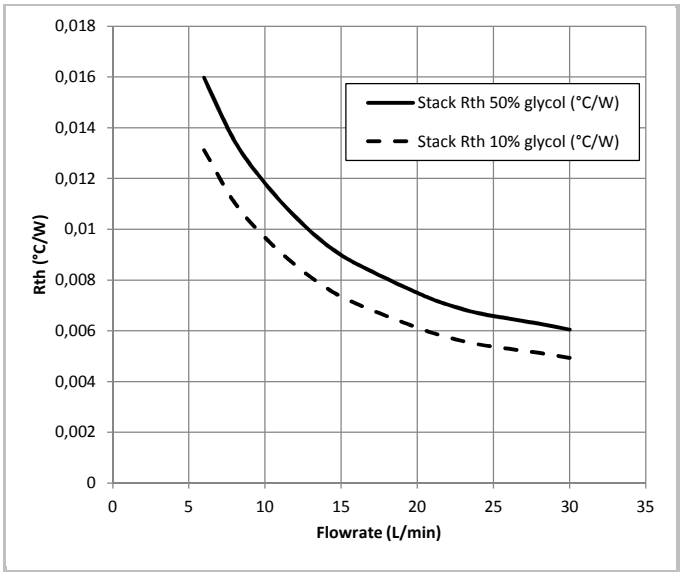

$Rth_{SinkWater}$(stack) vs. Liquid Flow (per stack)

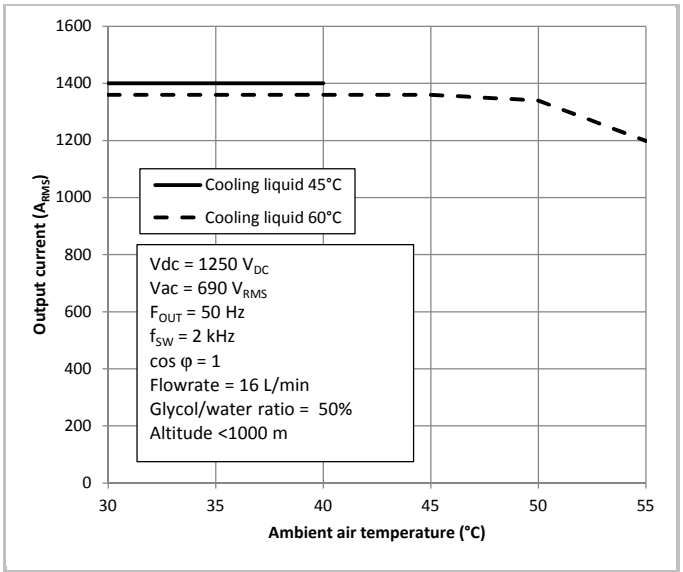

Permanent Output Current vs. Ambient Temperature

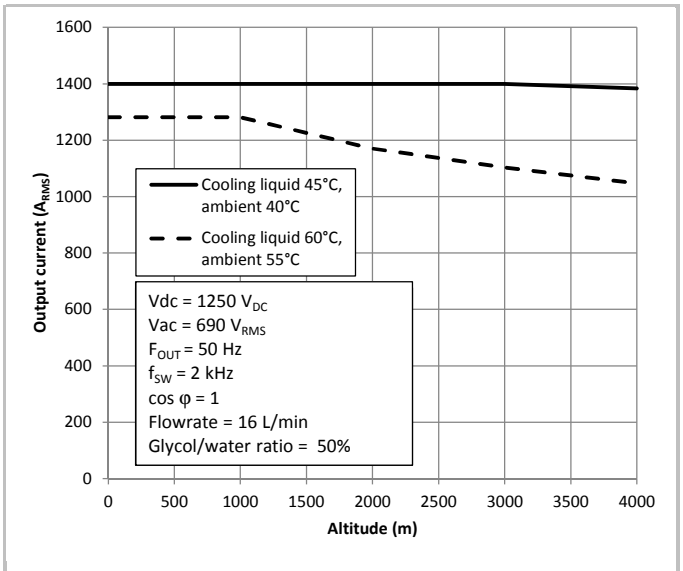

Permanent Output Current vs. Altitude

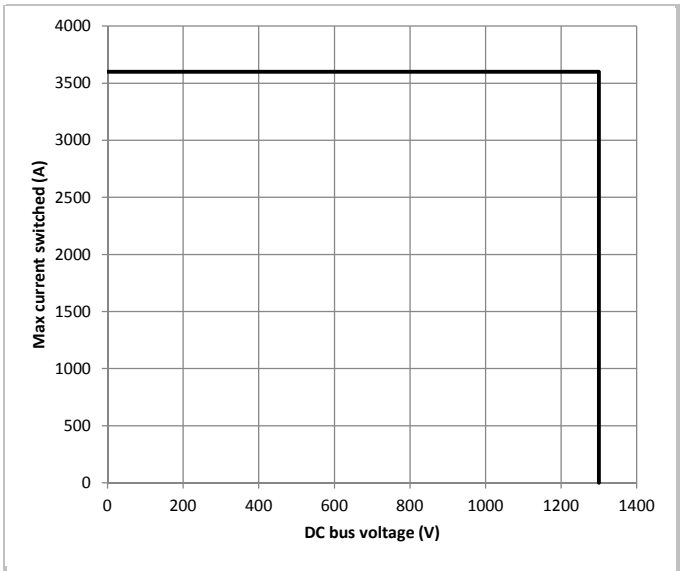

Safe Operating Area

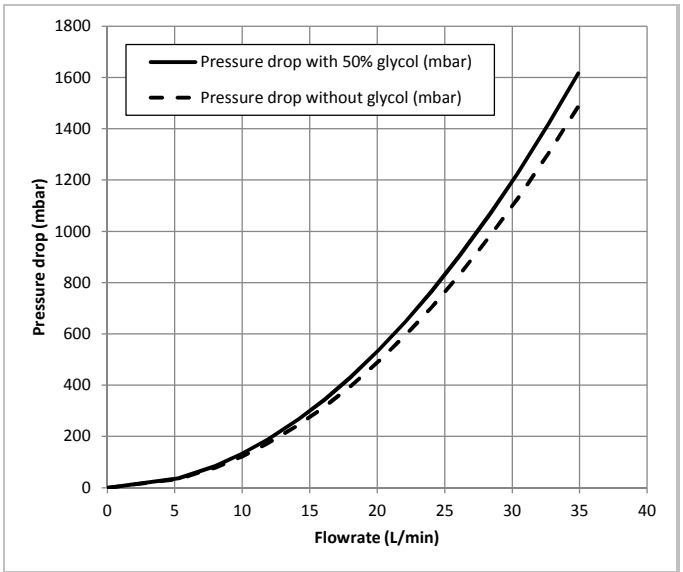

Pressure Drop vs. Flowrate (per stack)

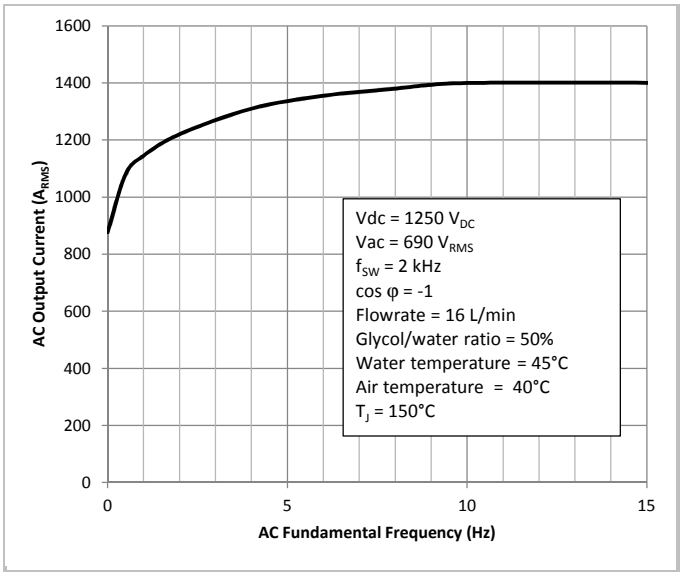

Permanent Output Current vs. Output Frequency